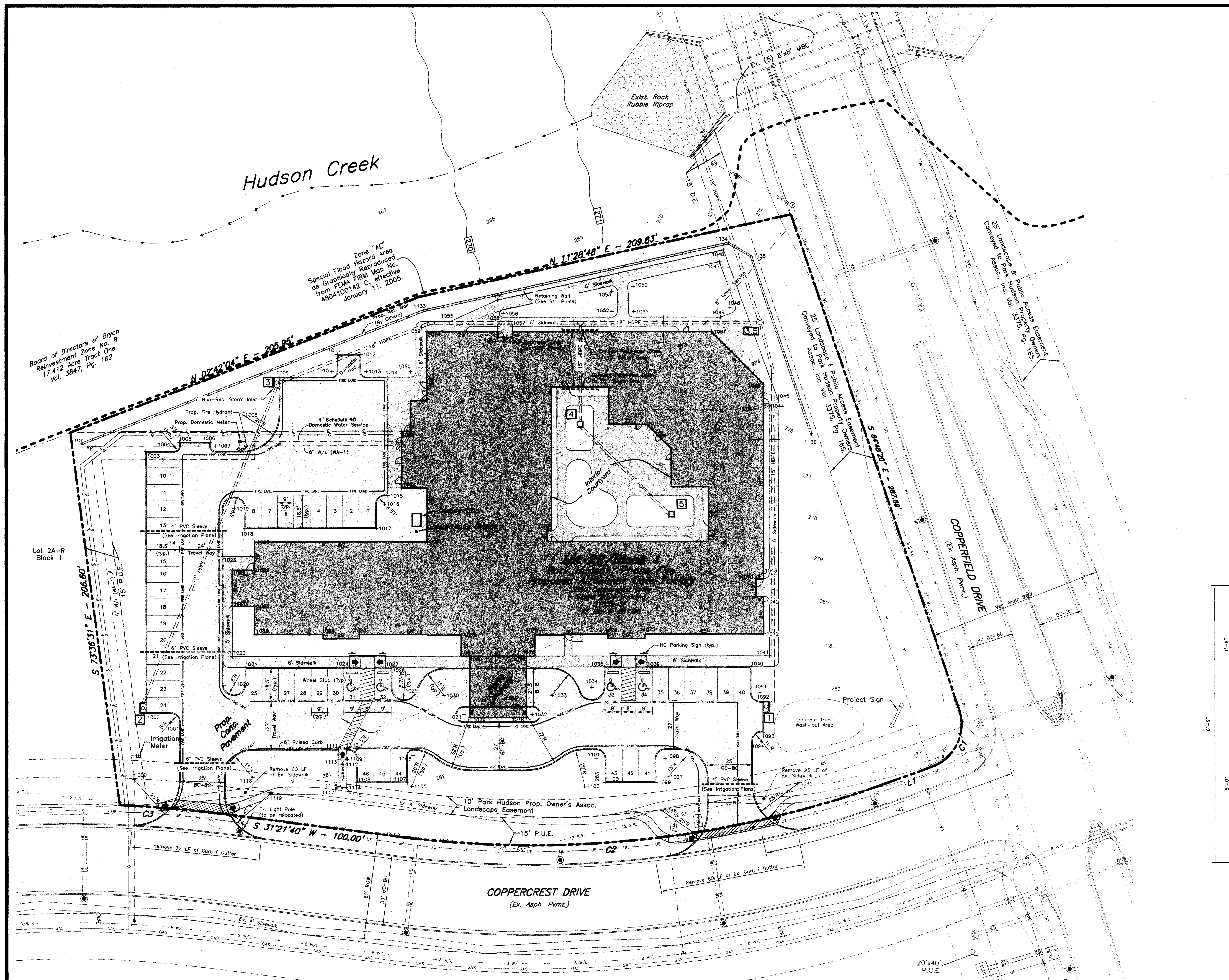

SITE PLAN

SCALE: Hor: 1" = 30'

0 15' 30'

LINE TABLE

LINE	BEARING	DISTANCE
L1	S 04°00'46" W	26.46'

CURVE TABLE

CURVE	DELTA	RADIUS	LENGTH	TANGENT	CHORD. BRG.	CHORD
C1	88°49'06"	25.00'	38.75'	24.49'	N 40°23'47" W	34.99'
C2	27°20'53"	570.00'	272.07'	138.68'	N 17°41'13" E	269.49'
C3	5°01'47"	630.00'	55.30'	27.67'	S 28°50'46" W	55.29'

Legend

289	Ex. Ground Contour (1' Interval)
8 S/L	Existing Sewer Line w/ size & manhole
6 W/L	Existing Water Line w/ size
	Fire Hose Lay (75')
	Ambulatory Ramp
	Fire Hydrant
	Water Meter
	Prop. Handicapped Parking Sign

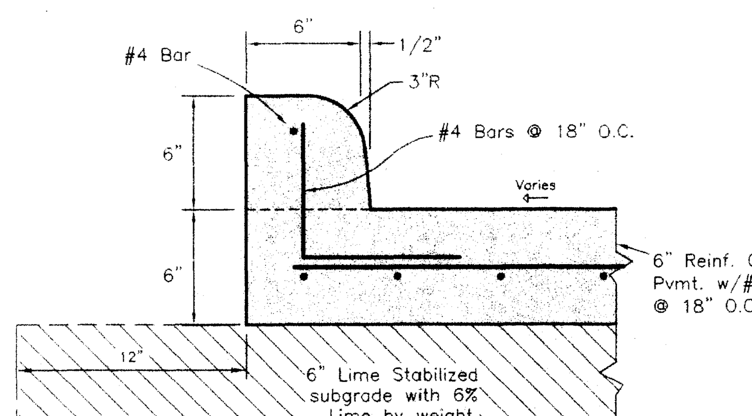

TYPICAL 6" RAISED CURB & PAVEMENT DETAIL

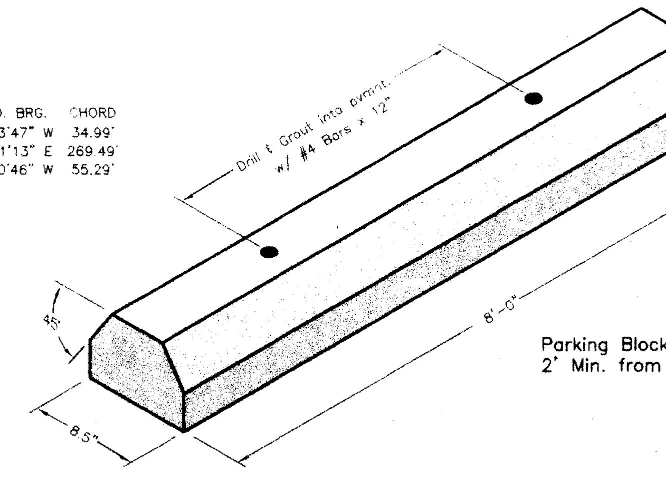

Parking Block shall be installed 2' Min. from Back of Parking Space.

WHEEL STOP
NTS

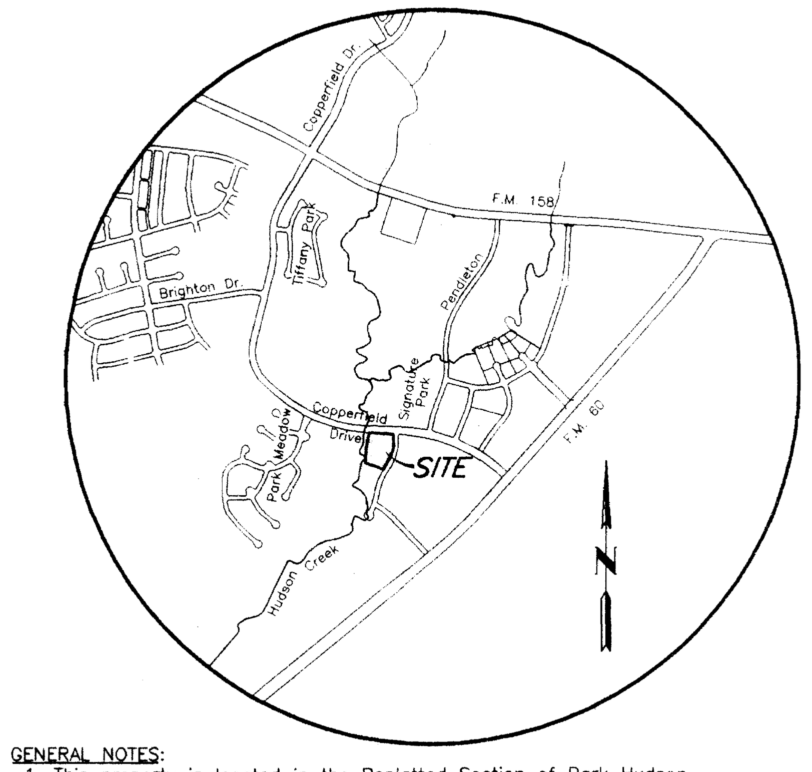

GENERAL NOTES:

1. This property is located in the Replatted Section of Park Hudson Phase 5 (Vol. 6221, Pg. 144) and is currently Zoned PD.
2. Owner:
   Bryan Care Group, LP
   6060 N Central Expressway, Suite 560
   Dallas, Tx 75206-5268
   (214) 800-2820
3. Proposed Use: Health Care Facility
   Gross Square Footage (Heated): 31032 SF
   BUILDING IS SPRINKLED
4. Parking Analysis:
   39 Residence Units/5 + 15 Day Staff Members = 22.8
   Parking Spaces Required = 23
   Parking Spaces Provided = 46

5. WATER AND SANITARY SEWER GENERAL NOTES:
   Water Demands: Max.= 31 GPM
   Avg.= 8 GPM
   Min.= 0 GPM
   Irrigation: Max.= 20 GPM

   Sewer Demands: 4500 GPD (Max.)

6. According to the Flood Insurance Rate Maps for Brazos County, Texas and Incorporated Areas, Map Numbers 48041C0142C, effective January 11, 2005. This property is not located in the 100 Year Flood Hazard Area.
7. See Civil Engineering Drawings for grading and drainage details.
8. Contour Information has been prepared from an actual on-the-ground survey.
9. Abbreviations:
   P.U.E. – Public Utility Easement
   P.D.E. – Public Drainage Easement
10. The contractor shall be responsible for the containment and proper disposal of all liquid and solid waste associated with this project. The contractor shall use all means necessary to prevent the occurrence of wind blown litter from the project site.
11. Type of waste streams generated at this site:
    Normal Domestic Wastewater
12. Contractor to contact Ruben Reyes @ 209-5934 / Hoil Spears @ 209-5945 w/ Solid Waste Department to receive on-site review and approval of dumpster pad location prior to placement of concrete.

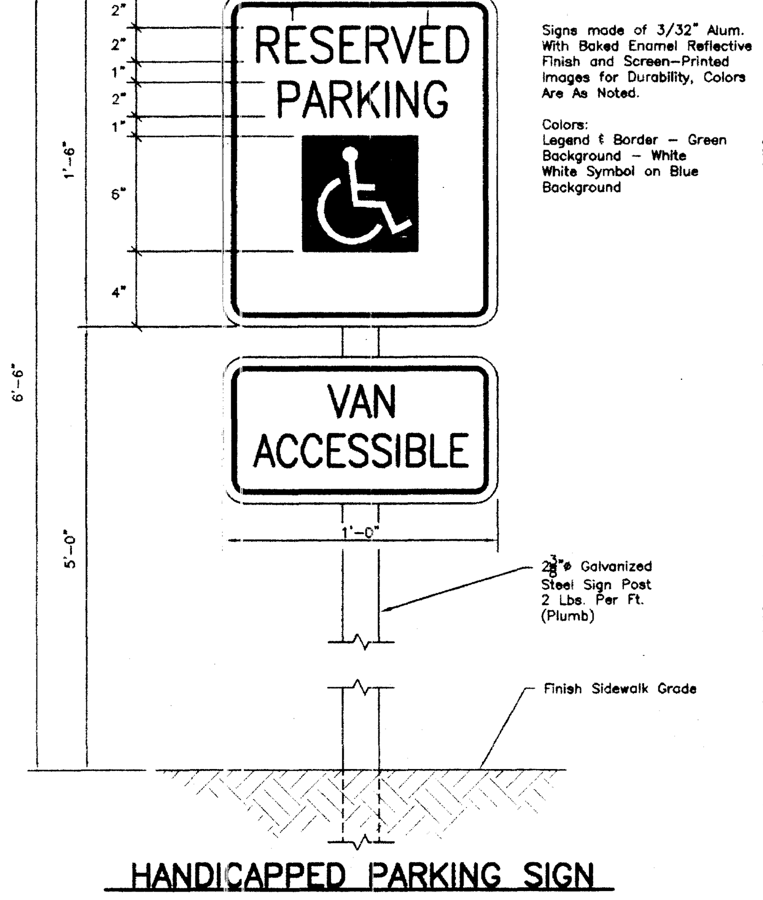

HANDICAPPED PARKING SIGN
(R7-8 PER M.U.T.C.D.)

SIGN INSTALLATION NOTES:

1. All signs shall be posted on 2-3/8" outside diameter Galvanized Steel Pipe Signposts that weigh two (2) pounds per linear foot. These signposts shall be placed a minimum of 2.5 to 3.0 feet into the ground in a dug or drilled one-foot diameter hole. The sign-post shall be placed vertically plumb in the center of the hole and secured with a minimum of two (2) socks of sackcrete. The concrete mix shall be hand tamped as necessary.
2. Stop signs (MUTCD #MR1-1) shall be installed so that the bottom of each sign shall be at least seven (7) feet above the ground at the base of the signpost or above an adjacent travelway. All traffic signposts shall be installed 24" from the travelway. Handicapped Parking Signs shall be installed so that the bottom of each sign shall be at least five (5) feet above the ground at the base of the signpost or above an adjacent travelway. All Handicapped Parking sign-posts shall be installed 12" (Hor) from the Travelway or sidewalk.
3. The hardware used to attach the signs to the signposts shall be the same as that currently used by the City of Bryan.

STRIPING NOTES:

1. Contractor shall be responsible for the "layout" of the striping plan in the field and stripe as shown on this sheet. All markings shall be white.
2. All paint, glass beads and application rates shall conform to TxDOT Item 666, Reflectorized Pavement Markings, Type II Marking Materials.
3. All Parking Space Limit Lines shall be solid white lines 6" wide.
4. All marking/striping shall conform to current specifications of the Texas Manual on Uniform Traffic Control Devices, the TEXAS ACCESSIBILITY STANDARDS (TAS) of the Architectural Barriers Act [Article 9102, Texas Civil Statutes] from the Texas Department of Licensing and Regulation and City of Bryan Ordinances.

Pts	Northing	Easting	Desc
1000	10223506.92	3564484.03	25' Radius
1001	10223538.05	3564463.58	5' Radius
1002	10223527.73	3564453.54	Back/Curb
1003	10223586.10	3564321.90	Back/Curb
1004	10223601.49	3564325.44	3' Radius
1005	10223605.04	3564324.82	Back/Curb
1006	10223620.58	3564331.71	Back/Curb
1007	10223622.51	3564334.76	3' Radius
1008	10223643.01	3564325.25	20' Radius
1009	10223669.72	3564314.34	Back/Curb
1010	10223697.49	3564323.37	3' Radius
1011	10223704.08	3564315.91	Back/Curb
1012	10223715.97	3564321.17	Back/Curb
1013	10223714.86	3564331.08	3' Radius
1014	10223724.57	3564338.66	Back/Curb
1015	10223698.10	3564398.35	Back/Curb
1016	10223694.56	3564401.70	4.5' Radius
1017	10223684.97	3564412.22	Back/Curb
1018	10223618.70	3564382.84	Back/Curb
1019	10223617.67	3564370.35	6' Radius
1020	10223578.60	3564458.48	6' Radius
1021	10223587.73	3564452.69	Back/Curb
1022	10223583.76	3564444.36	Sidewalk
1023	10223601.50	3564392.01	Sidewalk
1024	10223640.29	3564475.99	Sidewalk
1027	10223658.58	3564484.10	Sidewalk
1028	10223661.78	3564485.52	Sidewalk
1029	10223663.46	3564498.38	6.75' Radius
1030	10223681.63	3564511.31	15' Radius
1031	10223687.39	3564525.35	4' Radius
1032	10223721.71	3564540.56	4' Radius
1033	10223735.98	3564535.41	15' Radius
1034	10223757.76	3564540.20	6.75' Radius
1035	10223768.42	3564532.80	Sidewalk
1039	10223789.90	3564542.32	Sidewalk
1040	10223842.47	3564565.63	Sidewalk
1041	10223854.17	3564564.25	Sidewalk
1042	10223863.48	3564535.86	3' Radius
1043	10223869.81	3564521.57	3' Radius
1044	10223909.92	3564438.51	Sidewalk
1045	10223915.79	3564437.57	Sidewalk
1046	10223921.80	3564349.73	Sidewalk
1047	10223916.96	3564354.87	Sidewalk
1048	10223912.21	3564380.26	3' Radius
1049	10223905.18	3564382.79	Sidewalk
1050	10223868.04	3564348.00	3' Radius
1051	10223862.81	3564360.72	3' Radius
1052	10223851.78	3564355.83	3' Radius
1053	10223856.25	3564345.60	3' Radius
1054	10223797.02	3564324.39	Sidewalk
1055	10223768.05	3564324.57	Sidewalk
1056	10223796.65	3564332.48	2' Radius
1057	10223798.43	3564340.93	Sidewalk
1058	10223791.13	3564337.69	Sidewalk
1059	10223752.58	3564321.00	3' Radius
1060	10223737.17	3564340.97	3' Radius
1061	10223707.44	3564430.22	Bldg
1062	10223706.67	3564397.42	Bldg
1063	10223719.24	3564369.08	Bldg
1064	10223754.26	3564324.63	Bldg
1065	10223788.70	3564343.17	Bldg
1066	10223796.00	3564346.41	Bldg
1067	10223897.44	3564388.11	Bldg
1068	10223912.11	3564426.16	Bldg
1070	10223864.65	3564522.57	Bldg
1071	10223860.75	3564531.37	Bldg
1072	10223856.32	3564552.00	Bldg
1073	10223796.30	3564525.39	Bldg
1074	10223777.70	3564517.15	Bldg
1075	10223740.88	3564501.19	Bldg
1076	10223736.12	3564511.92	Bldg
1077	10223731.70	3564509.95	Bldg
1078	10223718.02	3564540.81	Bldg
1079	10223689.68	3564528.24	Bldg
1080	10223703.36	3564497.39	Bldg
1081	10223698.95	3564495.43	Bldg
1082	10223703.70	3564484.70	Bldg
1083	10223652.93	3564461.84	Bldg
1084	10223634.36	3564453.61	Bldg
1085	10223599.92	3564438.34	Bldg
1086	10223606.20	3564424.17	Bldg
1087	10223594.93	3564419.17	Bldg
1088	10223603.04	3564400.89	Bldg
1089	10223614.31	3564405.89	Bldg
1090	10223620.59	3564391.72	Bldg
1091	10223841.42	3564580.33	5' Radius
1092	10223841.22	3564585.71	Back/Curb
1093	10223834.33	3564601.26	Back/Curb
1094	10223831.10	3564605.29	10' Radius
1095	10223839.91	3564634.80	25' Radius
1096	10223765.33	3564617.99	25' Radius
1097	10223775.99	3564602.33	15' Radius
1098	10223778.58	3564592.54	5' Radius
1099	10223768.74	3564602.40	Back/Curb
1100	10223743.14	3564591.05	Back/Curb
1101	10223743.84	3564577.14	5' Radius
1102	10223732.03	3564588.31	20' Radius
1103	10223718.58	3564538.09	32' Radius
1104	10223691.33	3564526.00	32' Radius
1105	10223645.07	3564549.76	20' Radius
1106	10223652.63	3564534.53	3' Radius
1107	10223643.81	3564547.01	Back/Curb
1108	10223618.21	3564535.66	Back/Curb
1109	10223618.91	3564521.75	5' Radius
1110	10223620.40	3564516.40	Sidewalk
1111	10223616.75	3564514.78	Sidewalk
1112	10223617.97	3564521.88	Sidewalk
1113	10223614.31	3564520.26	Sidewalk
1114	10223611.82	3564535.76	Sidewalk
1115	10223608.39	3564533.62	Sidewalk
1116	10223612.71	3564538.64	Sidewalk
1117	10223605.88	3564534.39	Sidewalk
1118	10223567.02	3564509.68	15' Radius
1119	10223572.53	3564521.81	25' Radius
1132	10223555.41	3564303.73	Wall
1133	10223757.07	3564313.25	Wall
1134	10223925.59	3564347.47	Wall
1135	10223934.28	3564359.10	Wall
1136	10223924.92	3564462.06	Wall

DATE: June, 2005
DRAWN BY: PJH
DESIGNED BY: SCF JLR
CHECKED BY: MRM
06/28/05 10000063-001-02.dwg

REVISIONS
6/29/05-Revised per City Comments.

McCLURE & BROWNE ENGINEERING/SURVEYING, INC.
1008 Woodcreek Drive, Suite 103
College Station, Texas 77845
(979) 693-3838

M&B

SITE PLAN

BRYAN ALZHEIMER'S SPECIAL CARE

SHEET NO
2
OF 6 SHEETS